Name: ANSWERS Date:

21/21 REVIEW – Non Calculator Section

1. Solve each quadratic equation below. Simplify all answers. **[12]**

(a) $3x^2 + 9 = 33$

$3x^2 + 9 = 33$

$3x^2 = 24$

$x^2 = 8$

$x = \pm\sqrt{8}$

$x = \pm\sqrt{(4)(2)}$

$x = \pm 2\sqrt{2}$

(b) $2x^2 + 11x = 21$

$2x^2 + 11x - 21 = 0$

$2x^2 - 3x + 14x - 21 = 0$

$x(2x-3) + 7(2x-3) = 0$

$(x+7)(2x-3) = 0$

$x + 7 = 0 \quad 2x - 3 = 0$

$x = -7$ or $x = \frac{3}{2} = 1.5$

$2 \times -21 = -42$

-42

$-3 \quad 14$

$14 - 3 = 11$

$14 \times (-3) = -42$ ✓

(c) $15x^2 = 2 + x$

$15x^2 - x - 2 = 0$

$15 \times (-2) = -30$

-30

$-6 \quad 5$

$-6 + 5 = -1$

$-6 \times 5 = -30$ ✓

$15x^2 + 5x - 6x - 2 = 0$

$5x(3x+1) - 2(3x+1) = 0$

$(5x-2)(3x+1) = 0$

$5x - 2 = 0$ or $3x + 1 = 0$

$x = \frac{2}{5} \qquad x = -\frac{1}{3}$

(d) $\frac{1}{x+1} + \frac{3}{3x-5} = 1$

$1(3x-5) + 3(x+1) = 1(x+1)(3x-5)$

$3x - 5 + (3x+3) = 3x^2 - 5x + 3x - 5$

$3x - 5 + 3x + 3 = 3x^2 - 2x - 5$

$6x - 2 = 3x^2 - 2x - 5$

$0 = 3x^2 - 8x - 3$

$0 = 3x^2 - 9x + 1x - 3$

$0 = 3x(x-3) + (x-3)$

$0 = (3x+1)(x-3)$

$x - 3 = 0$ or $3x + 1 = 0$

$x = 3 \qquad x = -\frac{1}{3}$

$3 \times -3 = -9$

-9

$-9 \quad 1$

$-9 + 1 = -8$

$-9 \times 1 = -9$

2. For the quadratic function $f(x) = 2(x-1)^2 + 2$ find:

↑ in complete the square format

(i) The coordinates of the vertx

can read from equation given

$(1, 2)$

↑ remember that x is the opposite value.

(ii) The equation of the axis of symmetry

$x = \frac{-b}{2a}$ ← basic equation. Only works if equation is in $f(x) = ax^2 + bx + c$ format.

$f(x) = 2(x^2 - 2x + 1) + 2$

$f(x) = 2x^2 - 4x + 2 + 2$

$f(x) = 2x^2 - 4x + 4$

so $x = \frac{-(-4)}{2(2)} = \frac{+4}{4} = \underline{1}$

(iii) The x and y intercepts **exactly.**

For x-int, let $y = 0$

$0 = 2x^2 - 4x + 4$ ← from previous eqn

$0 = x^2 - 2x + 2$ ← divide by 2 on both sides

$x = \frac{2 \pm \sqrt{4 - 4(1)(2)}}{2(1)}$

$x = \frac{2 \pm \sqrt{-4}}{2} = \frac{2 \pm i2}{2} = \frac{2 \pm 2i}{2} = 1 \pm i$

no x-intercepts b/c sol^{n} imaginary

For y-int, let $x = 0$

$f(0) = 2(0-1)^2 + 2$

$f(0) = 2(1) + 2$

$f(0) = 4$

y-int is 4 <u>or</u> $(0, 4)$

(iv) Sketch the function below. Label the vertex and the intercepts.

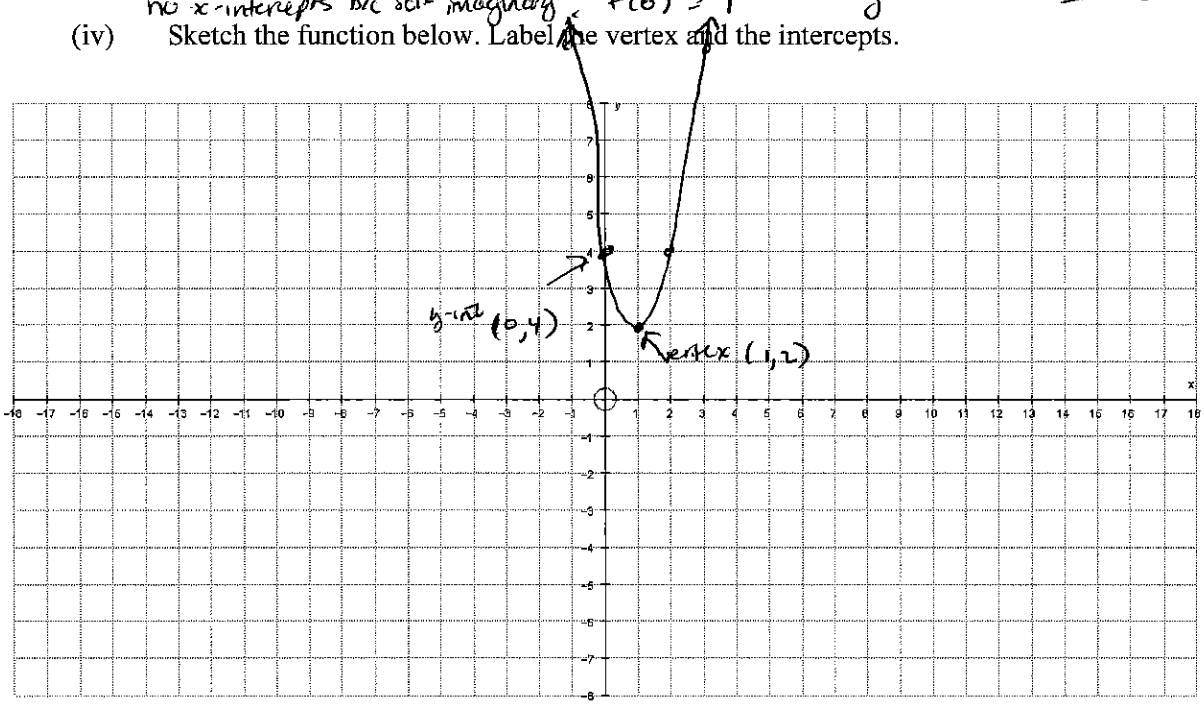

3. What are the coordinates of the vertex for the function $g(x) = (x+8)(x-4)$? **[3]**

COUPLE OF WAYS TO SOLVE THIS

① complete the square

expand:

$g(x) = x^2 - 4x + 8x - 32$

$0 = x^2 + 4x - 32$

$+32 \qquad +32$

$32 = x^2 + 4x$

$+4 \qquad +4$

$36 = x^2 + 4x + 4$

$36 = (x+2)^2$

$0 = (x+2)^2 - 36$

↗ from here vertex is $(-2, -36)$

I KNOW
$(x+2)^2$
$= (x+2)(x+2)$
$= x^2+4x+4$

② Using line of symmetry

x-int happens when $y = 0$

$0 = (x+8)(x-4)$

$x+8=0$ OR $x-4=0$

$x=-8 \qquad x=4$

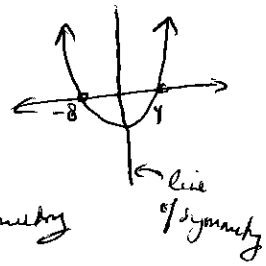

Find midpoint $\frac{-8+4}{2} = -2$

so $\boxed{x=-2}$ is line of symmetry

Use $x=-2$

$g(-2) = (-2+8)(-2-4)$

$= (+6)(-6) = -36$

$\boxed{\text{So vertex is } (-2,-36)}$

4. Does the parabola for $y = -2x^2 + 4$ open up or down? Give a reason for your answer. **[2]**

facing down as "−" infront of x^2

which means reflection in x-axis

5. Use the method of completing the square to solve the following quadratic. **[3]**

$$x^2 + 4x + 13 = 0$$

$-13 \quad -13$

$x^2 + 4x = -13$

$+4 \quad +4$

$x^2 + 4x + 4 = -9$

$(x+2)^2 = -9$

$\sqrt{(x+2)^2} = \sqrt{-9}$

$x+2 = \pm\sqrt{-9}$

$x+2 = \pm 3i$

$x = -2 \pm 3i$

I KNOW
$(x+2)^2$
$= (x+2)(x+2)$
$= x^2 + 4x + 4$

6. Find the quadratic function that represents the graph below. **[3]**

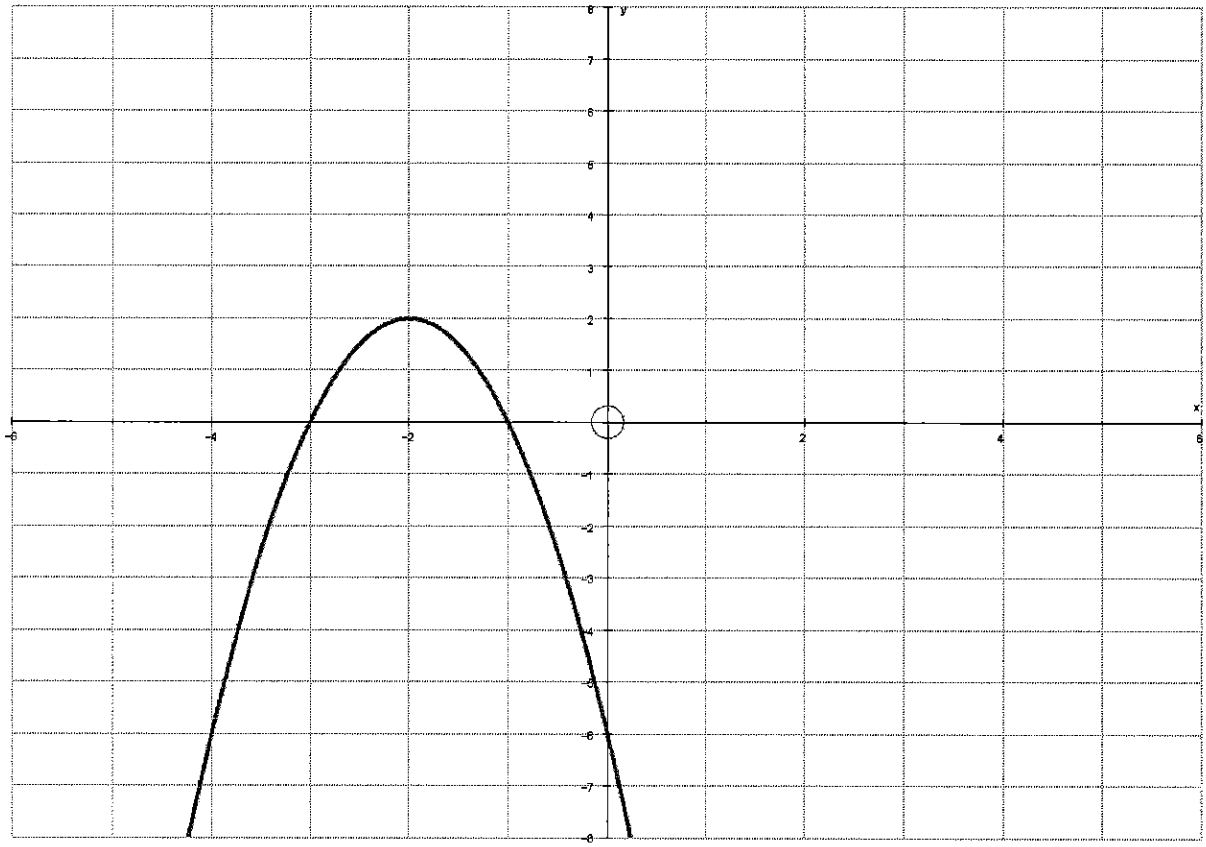

x-intercepts are $x = -3$ and $x = -1$

$f(x) = a(x+3)(x+1)$

$f(x) = a(x^2 + 3x + 1x + 3)$

$\boxed{f(x) = a(x^2 + 4x + 3)}$

Using $(-2, 2)$ sub $x = -2$ and $y = 2$ into eq^n

$2 = a((-2)^2 + 4(-2) + 3)$

$2 = a(4 + (-8) + 3)$

$2 = a(4 - 8 + 3)$

$2 = a(-1)$

$-2 = a$

$f(x) = -2(x^2 + 4x + 3)$

$f(x) = -2x^2 - 8x - 6$ ← works ✓

7. Simplify each. **[6]**

(a) $(3i-1)(3i-4)$

$9i^2 - 4(3i) - 1(3i) + 4$

$9(-1) - 12i - 3i + 4$

$-9 - 15i + 4$

$\boxed{-15i - 5}$

(b) $\frac{8}{i^3}$

$\frac{8}{(i^2)(i)}$

$= \frac{-8}{i} = \frac{-8}{i} \cdot \frac{i}{i} = \frac{-8i}{i^2} = \frac{-8i}{-1} = \boxed{8i}$

(c) $(3i\sqrt{2})^4$

$3^4 i^4 (\sqrt{2})^4$

$81(1)(2^{\frac{4}{2}})$

81×4

324

(d) $\frac{3}{1+i} \times \frac{1-i}{1-i}$

$\frac{3-i}{(1+i)(1-i)}$

$\frac{3-i}{1 - \cancel{i} + \cancel{i} + i^2}$

$\frac{3-i}{1-(-1)}$

$\frac{3-i}{2}$

(e) $\frac{3}{1+\sqrt{2}} * \frac{1-\sqrt{2}}{1-\sqrt{2}}$

$\frac{3-3\sqrt{2}}{1-2} = \frac{3-3\sqrt{2}}{-1} = 3\sqrt{2} - 3$

8. Find the **equation** of the image line when $y = 2x - 1$ is translated $\binom{1}{1}$. **[3]**

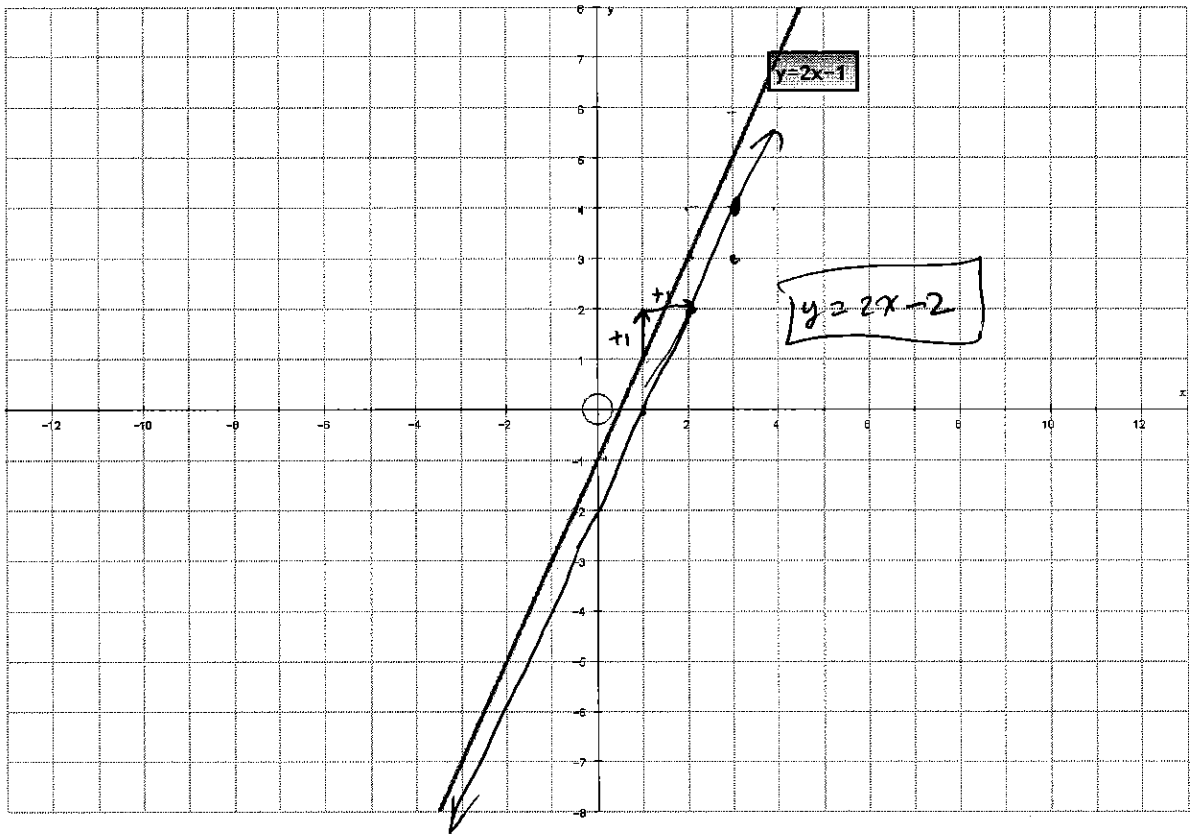

9. Rotate the object below 90° clockwise about (-2,0). **[3]**

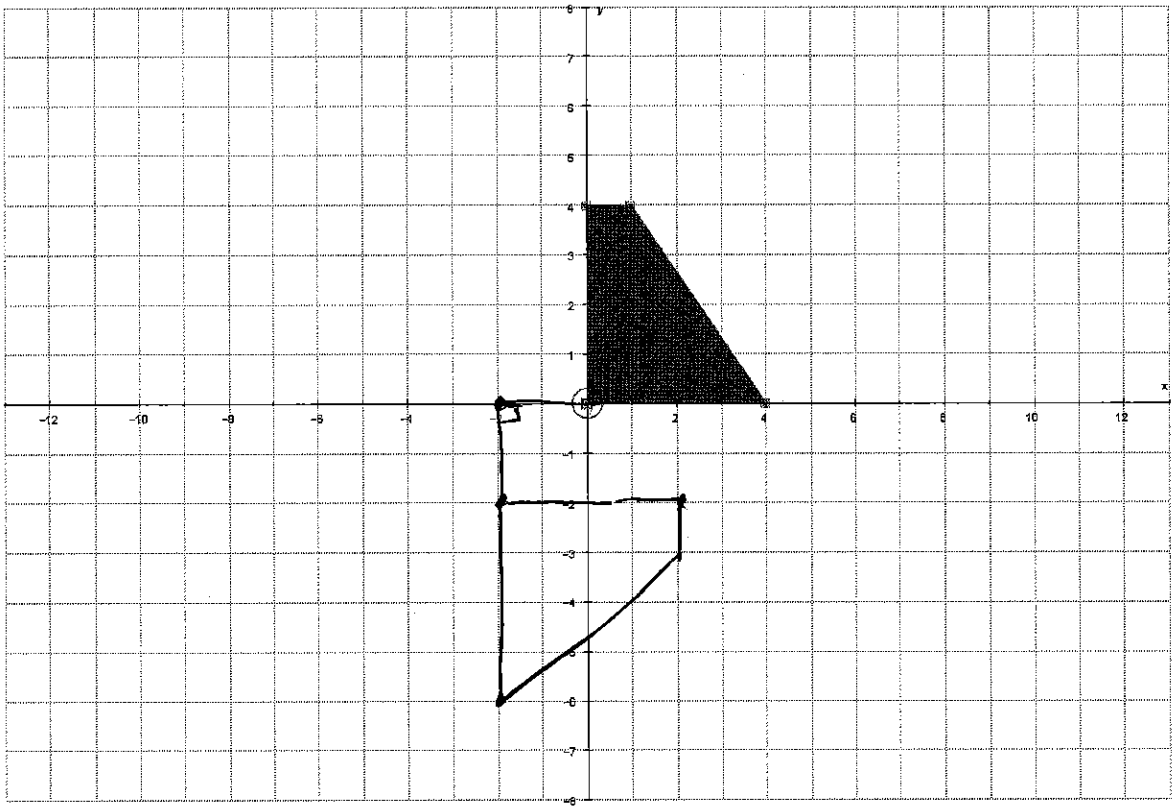

10. Describe the Transformation below. **[3]**

a stretch with ~~invariant~~ invariant y-axis by a ~~stretch~~ scale factor of 1.5

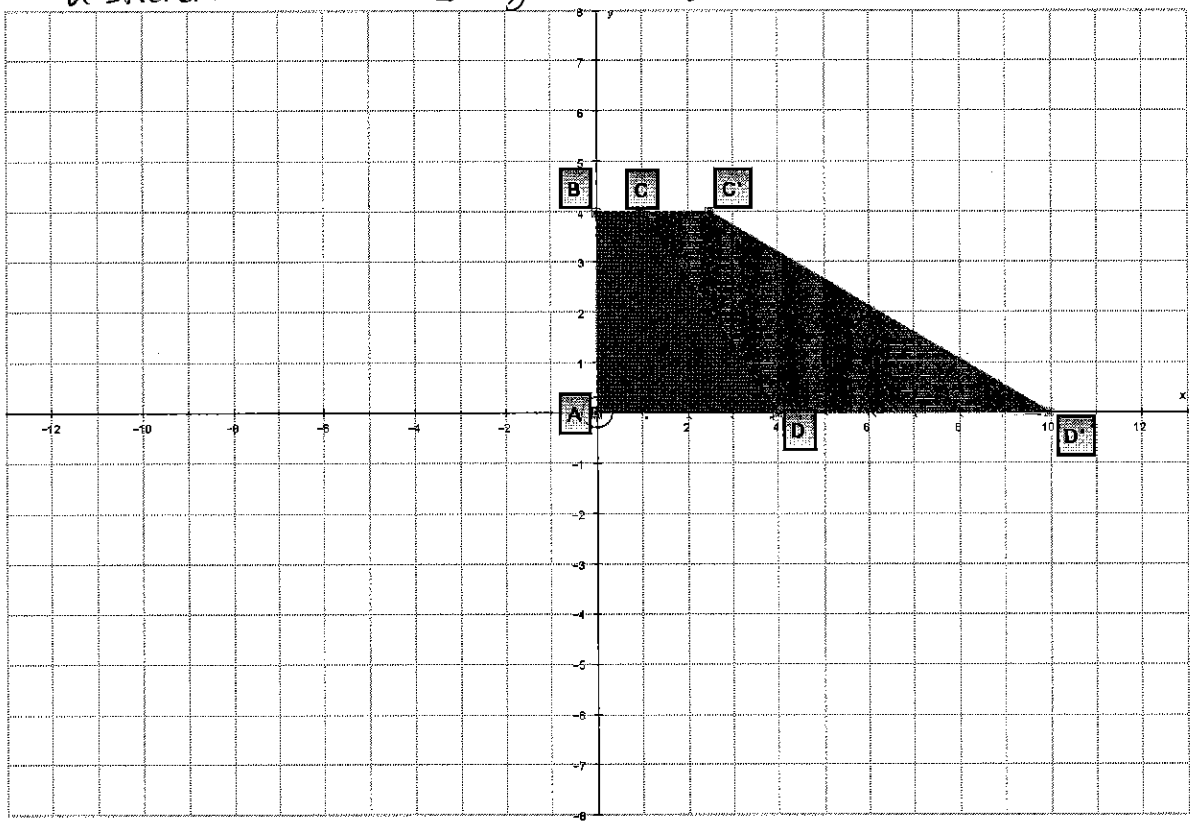

11. Find the image of the object below when it is enlarged by a scale factor of 2 about the origin. **[3]**

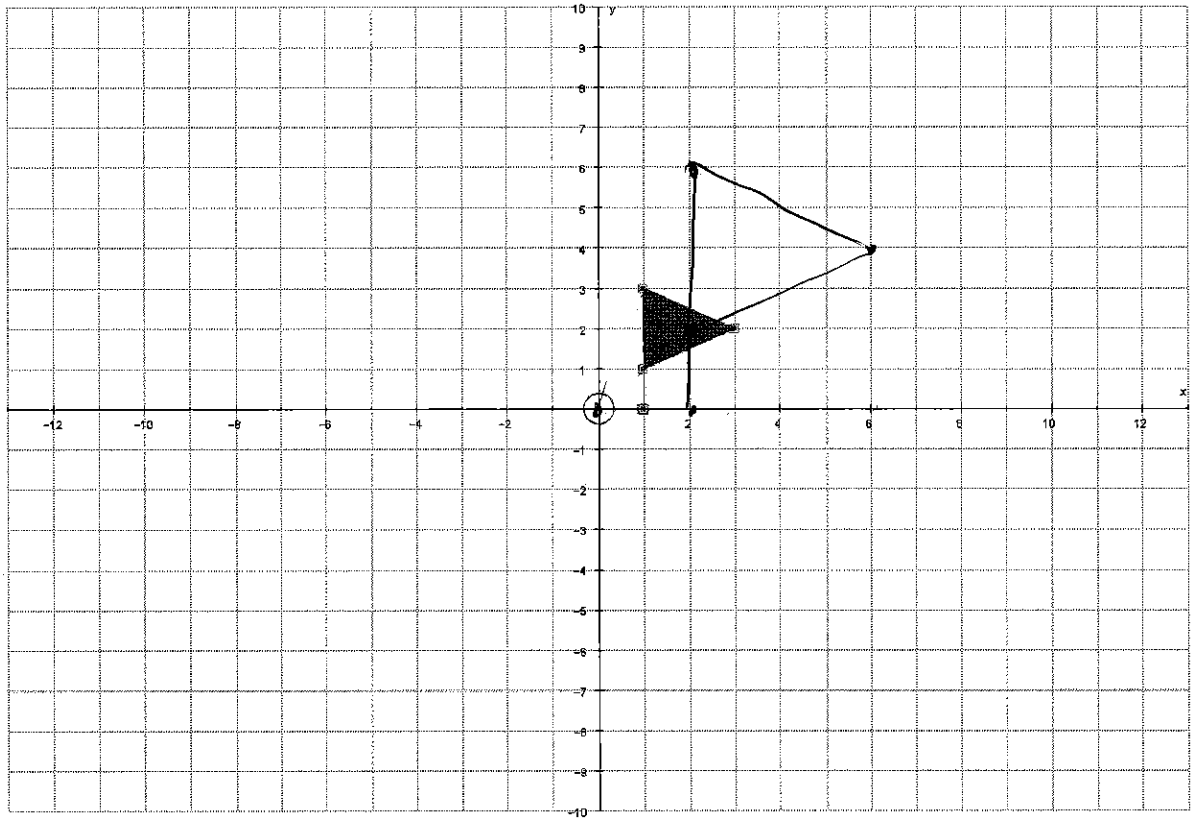
y
x
10
9
8
7
6
5
4
3
2
1
-1
-2
-3
-4
-5
-6
-7
-8
-9
-10
-12
-10
-8
-6
-4
-2
2
4
6
8
10
12

Name: Date:

20.21 Review –Calculator Section

1. Use technology to solve, give your answers to two decimal places. (cannot solve just solve till imaginary roots) **[3]**

$$-3x^2 = 2x + 2$$

$$0 = 3x^2 + 2x + 2$$

$a = 3$
$b = 2$
$c = 2$

$$x = \frac{-b \pm \sqrt{b^2 - 4ac}}{2a}$$

$$x = \frac{-2 \pm \sqrt{(2)^2 - 4(3)(2)}}{2(2)}$$

$$x = \frac{-2 \pm \sqrt{4 - 24}}{4}$$

$$x = \frac{-2 \pm \sqrt{-20}}{2}$$

$$x = \frac{-2 \pm i\sqrt{20}}{2}$$

$$x = -2 \pm i\sqrt{(4)(5)}$$

$$x = \frac{-2 \pm 2\sqrt{5}i}{2}$$

$$x = -1 \pm \sqrt{5}i$$

2. John has £220 to share amongst his grandchildren. However, three of his grandchildren have misbehaved recently, so they will not receive any money. As a result, the remaining grandchildren receive an extra £16.50 each. How many grandchildren does John have? **[4]**

You can do this by guess and check or algebra.

Have a go. Answer should be -->

3. Use the quadratic formula to solve the following quadratic equation. Give answer in simplest form. **[3]**

$$2x^2 - 5x - 8 = 0$$

$a = 2$
$b = -5$
$c = -8$

$$x = \frac{5 \pm \sqrt{(-5)^2 - 4(2)(-8)}}{2(2)}$$

$$x = \frac{5 \pm \sqrt{25 + 64}}{4}$$

$$x = \frac{5 \pm \sqrt{89}}{4}$$

$$x = \frac{5 + \sqrt{89}}{4} \quad \text{or} \quad x = \frac{5 - \sqrt{89}}{4}$$

$$x = 3.61 \qquad x = -1.11$$

4. Use the quadratic formula to solve the following quadratic and simplify any complex numbers.

$y = 2x^2 - 5x + 8$

$a = 2$
$b = -5$
$c = 8$

$$x = \frac{+5 \pm \sqrt{(-5)^2 - 4(2)(8)}}{2(2)}$$

$$x = \frac{5 \pm \sqrt{25 - 64}}{4}$$

$$x = \frac{5 \pm \sqrt{-39}}{4}$$

$$x = \frac{5 \pm i\sqrt{39}}{4}$$

$$x = \frac{5 + i\sqrt{39}}{4} \quad \text{OR} \quad x = \frac{5 - i\sqrt{39}}{4}$$